Nokia X2-00 User Guide

Issue 1.1

Contents

Safety 5

General information 7

About your device 7
Network services 8
Shared memory 9
Access codes 9
Software updates 10
Support 13

Get started 14

Keys and parts 14
Insert the battery 16
Insert the SIM card 16
Insert a memory card 18
Switch on or off 19
Charge the battery 20
Display 21
Home screen 22
Keypad lock 23
GSM antenna 24
Flashlight 24
Accessories 25

Calls 27

Make and answer a call 27
Loudspeaker 28
Dialling shortcuts 28

Write text 29

Text input modes 29
Traditional text input 30
Predictive text input 30

Navigate the menus 32

Messaging 32

Text and multimedia messages 33
Nokia Messaging Mail 35
Nokia Messaging IM 37
Flash messages 37

© 2009 Nokia. All rights reserved.

Nokia Xpress audio messages 38
Voice messages 39
Message settings 39

Contacts 40

Log 41

Music 42
Media player 42
FM radio 44

Camera and video 46

Photos 47

Settings 49
Profiles 49
Tones 49
Display 50
Date and time 50
Shortcuts 51
Synchronisation and backup 51
Connectivity 52
Call and phone 55
Accessories 56
Configuration 57
Restore factory settings 58

Applications 58
Alarm clock 58
Gallery 59
Extras 59
Voice recorder 61

Web or Internet 61
Connect to a web service 62

Visit Ovi 63

SIM services 63

© 2009 Nokia. All rights reserved.

Nokia original accessories 64

Practical rules about accessories 65

Battery 65

Green tips 66

Save energy 66

Recycle 67

Product and safety information 67

Index 86

© 2009 Nokia. All rights reserved.

Safety

Read these simple guidelines. Not following them may be dangerous or illegal. Read the complete user guide for further information.

SWITCH ON SAFELY

Do not switch the device on when wireless phone use is prohibited or when it may cause interference or danger.

ROAD SAFETY COMES FIRST

Obey all local laws. Always keep your hands free to operate the vehicle while driving. Your first consideration while driving should be road safety.

INTERFERENCE

All wireless devices may be susceptible to interference, which could affect performance.

© 2009 Nokia. All rights reserved.

SWITCH OFF IN RESTRICTED AREAS

Follow any restrictions. Switch the device off in aircraft, near medical equipment, fuel, chemicals, or blasting areas.

QUALIFIED SERVICE

Only qualified personnel may install or repair this product.

ACCESSORIES AND BATTERIES

Use only approved accessories and batteries. Do not connect incompatible products.

WATER-RESISTANCE

Your device is not water-resistant. Keep it dry.

© 2009 Nokia. All rights reserved.

General information

About your device

The wireless device described in this guide is approved for use on the EGSM 850, 900, 1800, 1900 MHz networks. Contact your service provider for more information about networks.

Your device may have preinstalled bookmarks and links for third-party internet sites and may allow you to access third-party sites. These are not affiliated with Nokia, and Nokia does not endorse or assume liability for them. If you access such sites, take precautions for security or content.

Warning:
To use any features in this device, other than the alarm clock, the device must be switched on. Do not switch the device on when wireless device use may cause interference or danger.

When using this device, obey all laws and respect local customs, privacy and legitimate rights of others, including copyrights. Copyright protection may prevent some images, music, and other content from being copied, modified, or transferred.

© 2009 Nokia. All rights reserved.

Make back-up copies or keep a written record of all important information stored in your device.

When connecting to any other device, read its user guide for detailed safety instructions. Do not connect incompatible products.

The images in this guide may differ from your device display.

Refer to the user guide for other important information about your device.

Network services

To use the device you must have service from a wireless service provider. Some features are not available on all networks; other features may require that you make specific arrangements with your service provider to use them. Network services involve transmission of data. Check with your service provider for details about fees in your home network and when roaming on other networks. Your service provider can explain what charges will apply. Some networks may have limitations that affect how you can use some features of this device requiring network support such as support for specific technologies like WAP 2.0

© 2009 Nokia. All rights reserved.

protocols (HTTP and SSL) that run on TCP/IP protocols and language-dependent characters.

Your service provider may have requested that certain features be disabled or not activated in your device. If so, these features will not appear on your device menu. Your device may also have customized items such as menu names, menu order, and icons.

Shared memory

The following features in this device may share memory: multimedia messaging (MMS), e-mail application, instant messaging. Use of one or more of these features may reduce the memory available for the remaining features. If your device displays a message that the memory is full, delete some of the information stored in the shared memory.

Access codes

The security code helps to protect your device against unauthorised use. The preset code is 12345. You can create and change the code, and set the device to request the code. Keep the code secret and in a safe place separate from your device. If you forget the code and your device is locked, your device will require service. Additional charges

© 2009 Nokia. All rights reserved.

may apply, and all the personal data in your device may be deleted. For more information, contact a Nokia Care point or your device dealer.

The PIN code supplied with the SIM card protects the card against unauthorised use. The PIN2 code supplied with some SIM cards is required to access certain services. If you enter the PIN or PIN2 code incorrectly three times in succession, you are asked for the PUK or PUK2 code. If you do not have them, contact your service provider.

The module PIN is required to access the information in the security module of your SIM card. The signing PIN may be required for the digital signature. The barring password is required when using the call barring service.

To set how your device uses the access codes and security settings, select **Menu** > **Settings** > **Security**.

Software updates

About device software and application updates

With device software updates and application updates, you can get new features and enhanced functions for your device. Updating the software may also improve your device performance.

© 2009 Nokia. All rights reserved.

It is recommended that you back up your personal data before updating your device software.

Warning:
If you install a software update, you cannot use the device, even to make emergency calls, until the installation is completed and the device is restarted. Be sure to back up data before accepting installation of an update.

Downloading software updates may involve the transmission of large amounts of data (network service).

Make sure that the device battery has enough power, or connect the charger before starting the update.

After you update your device software or applications, the instructions in the user guide may no longer be up to date.

Update device software using your PC

You can use the Nokia Software Updater PC application to update your device software. To update your device software, you need a compatible PC, a high-speed internet connection, and a compatible USB data cable to connect your device to the PC.

© 2009 Nokia. All rights reserved.

To get more information and to download the Nokia Software Updater application, go to www.nokia-asia.com/softwareupdate.

Update software over the air

Your service provider may send device software updates over the air directly to your device (network service). This option may not be available, depending on your device.

Downloading software updates may involve the transmission of large amounts of data (network service).

Make sure that the device battery has enough power, or connect the charger before starting the update.

Warning:
If you install a software update, you cannot use the device, even to make emergency calls, until the installation is completed and the device is restarted. Be sure to back up data before accepting installation of an update.

Request a software update

1 Select **Menu** > **Settings** and **Phone** > **Phone updates**.

© 2009 Nokia. All rights reserved.

2 To display the current software version and check whether an update is needed, select **Current sw details**.
3 Select **Downl. phone software**, and follow the instructions.
4 If the installation was cancelled after the download, to start the installation, select **Install software update**.

The software update may take several minutes. If there are problems with the installation, contact your service provider.

Support

When you want to learn more about how to use your product or you are unsure how your device should function, go to www.nokia.com/support, or using a mobile device, www.nokia.mobi/support.

If this does not resolve your issue, do one of the following:

- Restart the device: switch off the device, and remove the battery. After about a minute, replace the battery, and switch on the device.
- Restore the original factory settings.
- Update your device software.

© 2009 Nokia. All rights reserved.

If your issue remains unsolved, contact Nokia for repair options. Go to www.nokia-asia.com/repair. Before sending your device for repair, always back up the data in your device.

Get started

Keys and parts

1	Display
2	Selection keys
3	Navi™ key (scroll key)
4	Call key
5	Keypad
6	End/Power key
7	Earpiece

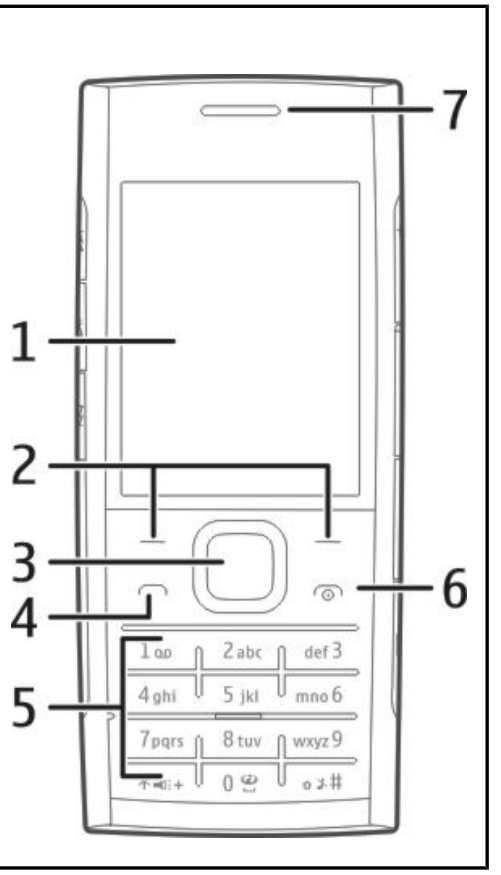

© 2009 Nokia. All rights reserved.

8	Headset connector
9	Charger connector
10	USB port
11–13	Music keys
14	Camera flash
15	Loudspeaker
16	Lens
17	Volume keys
18	Memory card slot
19	Capture key

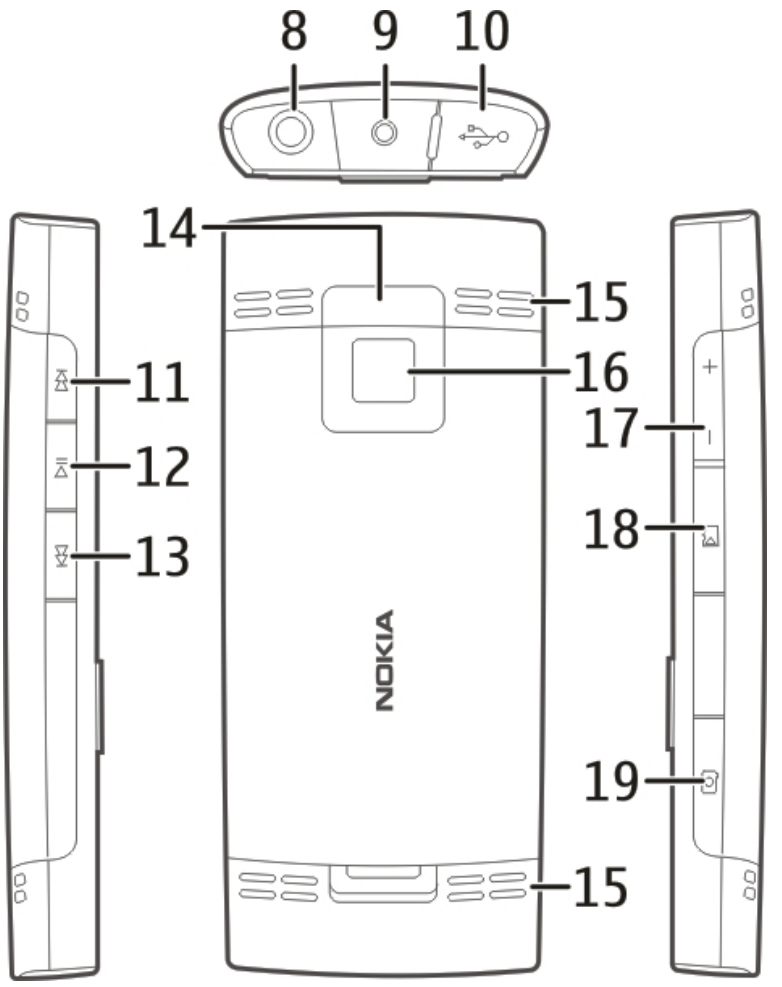

© 2009 Nokia. All rights reserved.

Insert the battery

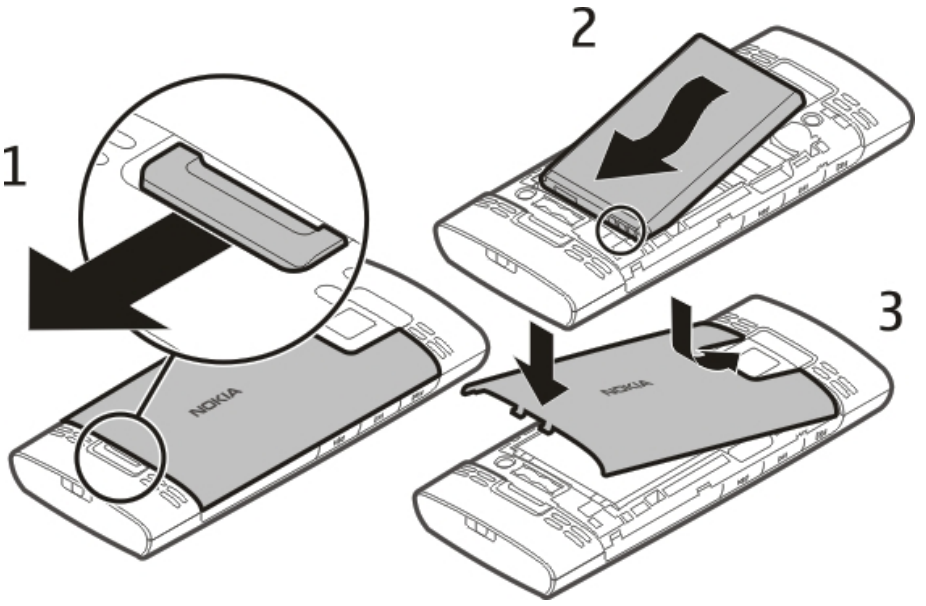

1 Remove the back cover.
2 Line up the battery contacts, and insert the battery.
3 Replace the back cover.

Insert the SIM card

The SIM card and its contacts can be easily damaged by scratches or bending, so be careful when handling, inserting, or removing the card.

© 2009 Nokia. All rights reserved.

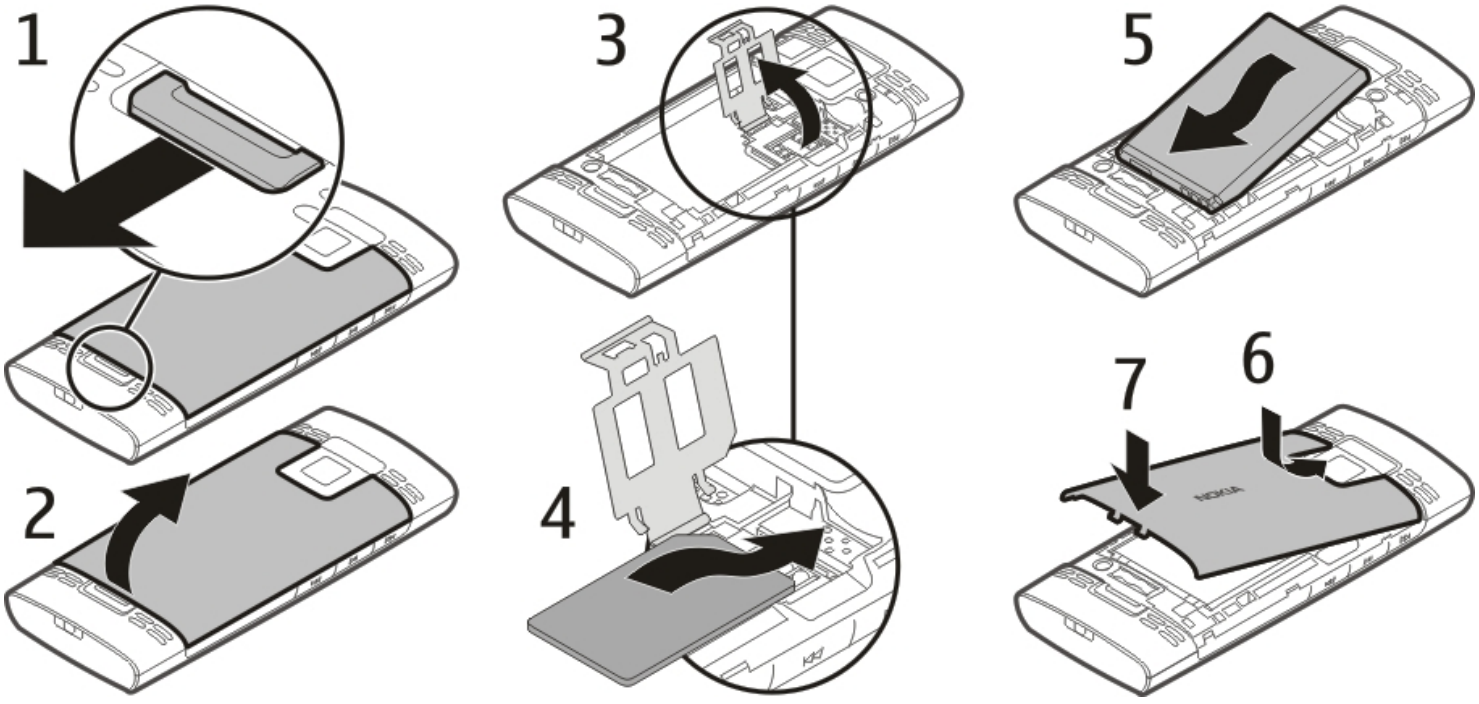

1 Remove the back cover and battery.
2 Open the SIM card holder.
3 Insert the SIM card into the holder, with the contact surface facing down.
4 Close the card holder.
5 Replace the battery and back cover.

© 2009 Nokia. All rights reserved.

Insert a memory card

Use only compatible MicroSD cards approved by Nokia for use with this device. Nokia uses approved industry standards for memory cards, but some brands may not be fully compatible with this device. Incompatible cards may damage the card and the device and corrupt data stored on the card.

Your device supports microSD cards with a capacity of up to 16 GB. The size of a single file must not exceed 2 GB.

© 2009 Nokia. All rights reserved.

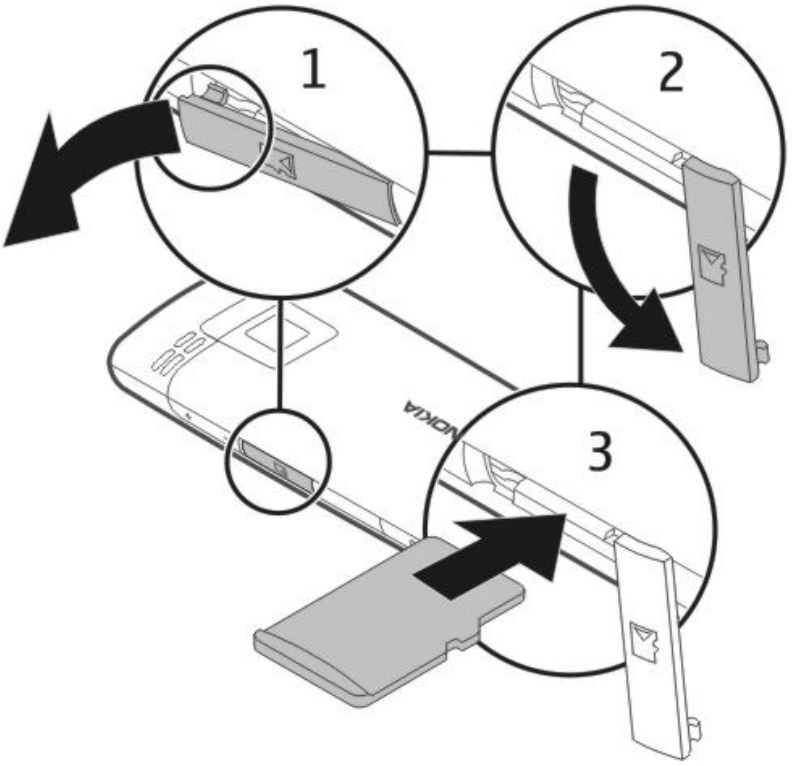

1 Open the memory card slot cover.
2 Pull the cover aside.
3 Insert the memory card into the slot, with the contact surface facing down.
4 Close the cover of the memory card slot.

Switch on or off

Press and hold the power key.

© 2009 Nokia. All rights reserved.

Charge the battery

Your battery has been partially charged at the factory. If the device indicates a low charge, do the following:

1 Connect the charger to a wall outlet.
2 Connect the charger to the device.
3 When the device indicates a full charge, disconnect the charger from the device, then from the wall outlet.

You do not need to charge the battery for a specific length of time, and you can use the device while it is charging. If the battery is completely discharged, it may take several minutes before the charging indicator appears on the display or before any calls can be made.

© 2009 Nokia. All rights reserved.

Display

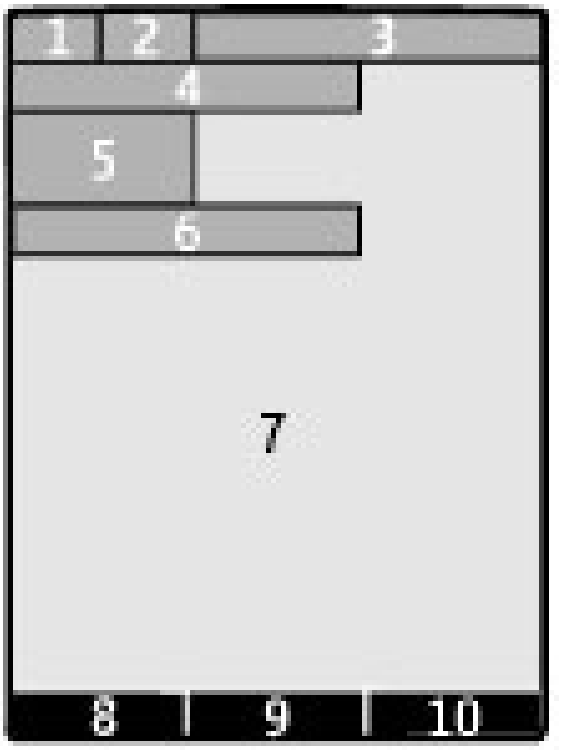

1 Signal strength of the cellular network
2 Battery charge status
3 Indicators
4 Name of the network or the operator logo
5 Clock
6 Date (if home screen mode is deactivated)
7 Display
8 Function of the left selection key
9 Function of the scroll key
10 Function of the right selection key

© 2009 Nokia. All rights reserved.

You can change the function of the left and right selection key. See "Shortcuts", p. 51.

Home screen

In the home screen, you can create shortcuts to your favourite applications.

Select **Menu** > **Settings** and **Display** > **Home screen**.

Activate the home screen

Select **Home screen mode** > **On**.

Organise and personalise the home screen

Select **Personalise view**.

Select the key used to activate the home screen

Select **Home screen key**.

Navigate in the home screen

Scroll up or down to navigate the list, and select **Select**, **View**, or **Edit**. The arrows indicate that further information is available.

Stop navigating

Select **Exit**.

© 2009 Nokia. All rights reserved.

Keypad lock

To prevent accidental keypresses, select **Menu**, and press * within 3.5 seconds to lock the keypad.

To unlock the keypad, select **Unlock**, and press * within 1.5 seconds. If the security keyguard is activated, enter the security code when requested.

To set the keypad to lock automatically after a defined length of time when the device is not being used, select **Menu** > **Settings** > **Phone** > **Automatic keyguard** > **On**.

To answer a call when the keypad is locked, press the call key. When you end or reject a call, the keypad locks automatically.

When the device or keypad is locked, calls may be possible to the official emergency number programmed into your device.

© 2009 Nokia. All rights reserved.

GSM antenna

Your device may have internal and external antennas. Avoid touching the antenna area unnecessarily while the antenna is transmitting or receiving. Contact with antennas affects the communication quality and may cause a higher power level during operation and may reduce the battery life.

The figure shows the GSM antenna area marked in grey.

Flashlight

The camera flash can be used as a flashlight. To switch the flashlight on or off, in the home screen, press and hold *.

Do not shine the flashlight in anyone's eyes.

© 2009 Nokia. All rights reserved.

Accessories

Connect a USB cable

Open the cover of the USB connector, and connect the USB cable to the device.

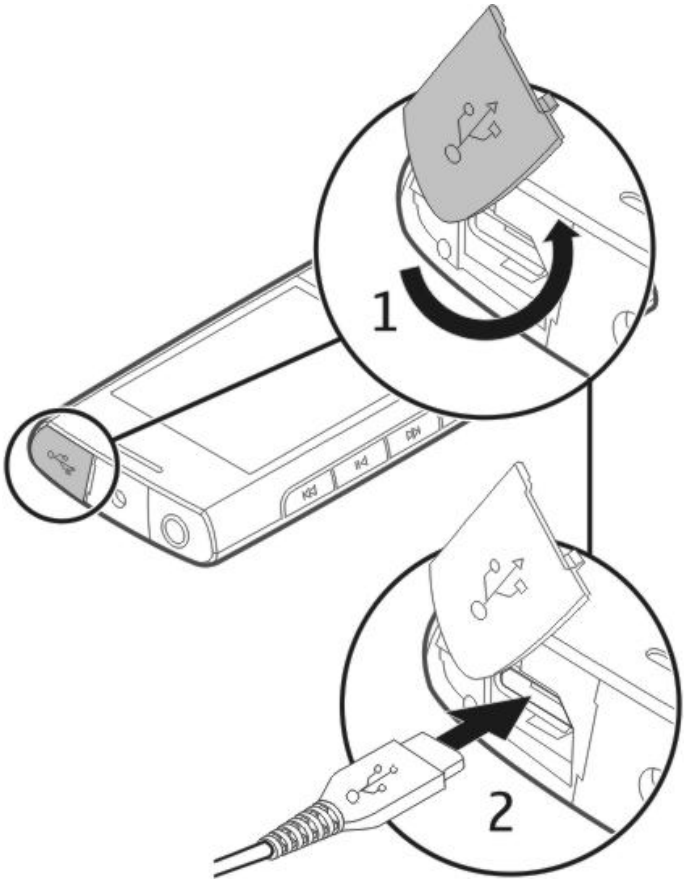

© 2009 Nokia. All rights reserved.

Connect a headset

Warning:
When you use the headset, your ability to hear outside sounds may be affected. Do not use the headset where it can endanger your safety.

When connecting any external device or any headset, other than those approved by Nokia for use with this device, to the Nokia AV Connector, pay special attention to volume levels.

Do not connect products that create an output signal as this may cause damage to the device. Do not connect any voltage source to the Nokia AV Connector.

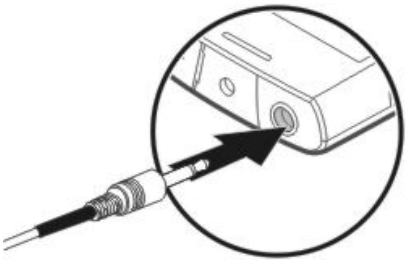

© 2009 Nokia. All rights reserved.

Attach a strap

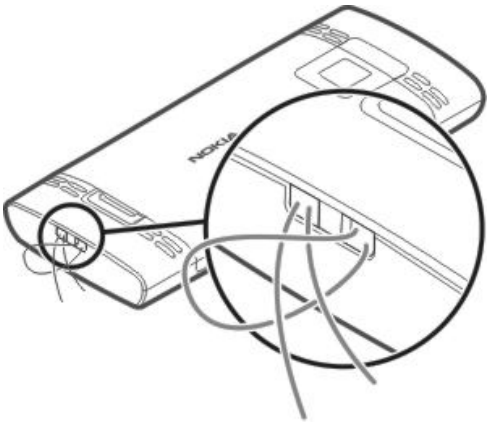

Calls

Make and answer a call

Make a call

Enter the phone number, including the country and area code if necessary, and press the call key.

Answer an incoming call

Press the call key.

Reject a call

Press the end key.

© 2009 Nokia. All rights reserved.

Adjust the volume

During a phone call, use the volume keys.

Loudspeaker

If available, you may select **Loudspeak.** or **Handset** to use the loudspeaker or the earpiece of the phone during a call.

Warning:
Continuous exposure to high volume may damage your hearing. Listen to music at a moderate level, and do not hold the device near your ear when the loudspeaker is in use.

Dialling shortcuts

Assign a phone number to a number key

Select **Menu** > **Contacts** > **More** > **Speed dials**, scroll to a desired number (2-9), and select **Assign**. Enter the desired phone number, or select **Search** and a saved contact.

Activate speed dialling

Select **Menu** > **Settings** > **Call** > **Speed dialling** > **On**.

© 2009 Nokia. All rights reserved.

Make a call using speed dialling

In the home screen, press and hold the desired number key.

Write text

Text input modes

To enter text, for example, when writing messages, you can use traditional or predictive text input.

Abc, abc, and ABC indicate the character cases. 123 indicates number mode.

Switch between text input modes

Select and hold **Options**. Not all languages are supported by predictive text input.

Switch between character cases

Press **#**.

Switch between letter and number modes

Press and hold **#**.

Set the writing language

Select **Options** > **More** > **Writing language**.

© 2009 Nokia. All rights reserved.

Traditional text input

Write a word

Press a number key, 2-9, repeatedly until the desired character is displayed. The available characters depend on the selected writing language. If the next letter you want to enter is located on the same key as the present one, wait until the cursor is displayed, and enter the letter.

Insert common punctuation marks

Press **1** repeatedly.

Insert special characters

Press *****, and select a character from the list.

Insert a space

Press **0**.

Predictive text input

Predictive text input is based on a built-in dictionary to which you can also add new words.

© 2009 Nokia. All rights reserved.

Write a word

Press the number keys, 2-9. Press each key only once for one letter.

Confirm a word

Scroll right, or press **0** to add a space.

Select the correct word

If the proposed word is not correct, press * repeatedly, and select the desired word from the list.

Add a word to the dictionary

If the ? character is displayed after the word, the word you intended to write is not in the dictionary. To add the word to the dictionary, select **Spell**. Enter the word using traditional text input, and select **Save**.

Write a compound word

Write the first part of the word, and scroll right to confirm it. Write the next part of the word, and confirm again.

© 2009 Nokia. All rights reserved.

Navigate the menus

The device functions are grouped into menus. Not all menu functions or option items are described here.

In the home screen, select **Menu** and the desired menu and submenu.

Exit the current menu level

Select **Exit** or **Back**.

Return to the home screen

Press the end key.

Change the menu view

Select **Menu** > **Options** > **Main menu view**.

Messaging

You can send and receive text, multimedia, audio, and flash messages. You can also handle your mail. The messaging services can only be used if your network or service provider supports them.

© 2009 Nokia. All rights reserved.

Text and multimedia messages

You can create a message and optionally attach, for example, a picture. Your phone automatically changes a text message to a multimedia message when a file is attached.

Text messages

Your device supports text messages beyond the limit for a single message. Longer messages are sent as two or more messages. Your service provider may charge accordingly. Characters with accents, other marks, or some language options take more space, and limit the number of characters that can be sent in a single message.

The total number of characters left and the number of messages needed for sending are displayed.

To send messages, the correct message centre number must be stored in your device. Normally, this number is set by default through your SIM card.

To set the number manually, do the following:

1 Select **Menu** > **Messaging** > **More** > **Message settings** > **Text messages** > **Message centre**.

© 2009 Nokia. All rights reserved.

2 Enter the name and number supplied by your service provider.

Multimedia messages

A multimedia message can contain text, pictures, and sound or video clips.

Only devices that have compatible features can receive and display multimedia messages. The appearance of a message may vary depending on the receiving device.

The wireless network may limit the size of MMS messages. If the inserted picture exceeds this limit, the device may make it smaller so that it can be sent by MMS.

Important: Exercise caution when opening messages. Messages may contain malicious software or otherwise be harmful to your device or PC.

For availability and subscription to the multimedia messaging service (MMS), contact your service provider.

Create a message

1 Select **Menu** > **Messaging** > **Create message**.

2 Write your message.

© 2009 Nokia. All rights reserved.

To insert a special character or a smiley, select **Options** > **Insert symbol**.

To attach an object to the message, select **Options** > **Insert object**. The message type changes automatically to multimedia message.

3 To add recipients, select **Send to** and a recipient.

To enter a phone number or mail address manually, select **Number or mail**. Enter a phone number, or select **Mail**, and enter a mail address.

4 Select **Send**.

Multimedia messages are indicated with an icon at the top of the display.

Service providers may charge differently depending on the message type. For details, contact your service provider.

Nokia Messaging Mail

Access your mail accounts from different providers with your device to read, write, and send mail.

Set up a mail account

Select **Menu** > **Messaging** > **Mail**.

© 2009 Nokia. All rights reserved.

If you do not already have a mail account, you can create a Nokia account, which includes the Ovi Mail service.

1 Select **Get Ovi Mail**.
2 Follow the instructions.

Read and send mail

Select **Menu** > **Messaging** > **Mail**.

Read mail

Select a mail and **Open**.

Mails with attachments, for example, images, are marked with a paperclip icon. Some attachments may not be compatible with your device, and cannot be displayed on your device.

View attachments

Select an attachment and **View**.

Write a mail

Select **Options** > **Compose New**.

© 2009 Nokia. All rights reserved.

Attach a file to the mail

Select **Options** > **Attach file**.

Send the mail

Select **Send**.

Close the Mail application

Select **Sign Out**.

Nokia Messaging IM

With instant messaging (IM) you can chat with other online users using your device. You can use an existing account for an IM community that is supported by your device. If you are not registered to an IM service, you can create an account for a supported IM service, using your computer or your device. The menus may vary, depending on the IM service.

To connect to the service, select **Menu** > **Messaging** > **More** > **Chat** and follow the instructions.

Flash messages

Flash messages are text messages that are instantly displayed upon reception.

© 2009 Nokia. All rights reserved.

Select **Menu** > **Messaging**.

1 Select **More** > **Other messages** > **Flash message**.
2 Write your message.
3 Select **Send to** and a contact.

Nokia Xpress audio messages

Create and send audio messages using MMS in a convenient way.

Select **Menu** > **Messaging**.

1 Select **More** > **Other messages** > **Audio message**. The voice recorder opens.
2 Select the icons to control the recording.

   ● — Record your message.

   ▯▯ — Pause the recording,

   ■ — Stop the recording.
3 Select **Send to** and a contact.

© 2009 Nokia. All rights reserved.

Voice messages

The voice mailbox is a network service to which you may need to subscribe. For more information, contact your service provider.

Call your voice mailbox

Press and hold **1**.

Edit your voice mailbox number

Select **Menu** > **Messaging** > **More** > **Voice messages** and **Voice mailbox number**.

Message settings

Select **Menu** > **Messaging** and **More** > **Message settings**.

Select from the following:

General settings — Set the font size for messages, and activate graphical smileys and delivery reports.

Text messages — Set up message centres for text messages and SMS mail.

Multimedia messages — Allow delivery reports and the reception of multimedia messages and advertisements,

© 2009 Nokia. All rights reserved.

and set up other preferences related to multimedia messages.

Service messages — Activate service messages, and set up preferences related to service messages.

Contacts

Select **Menu** > **Contacts**.

You can save names and phone numbers in the device memory or on the SIM card. In the device memory, you can save contacts with numbers and text items. Names and numbers saved on the SIM card are indicated with .

Add a contact

Select **Add new**.

Add details to a contact

Ensure that the memory in use is either **Phone** or **Phone and SIM**. Select **Names**, scroll to the name, and select **Details** > **Options** > **Add detail**.

© 2009 Nokia. All rights reserved.

Search for a contact

Select **Names**, and scroll through the list of contacts or enter the first letters of the name.

Copy a contact to another memory

Select **Names**, scroll to the contact, and select **Options** > **More** > **Copy contact**. On the SIM card, you can save only one phone number for each name.

Select where to save contacts, how contacts are displayed, and the memory consumption of contacts

Select **More** > **Settings**.

Send a business card

In the contacts list, scroll to a contact, and select **Options** > **More** > **Business card**. You can send and receive business cards from devices that support the vCard standard.

Log

To view information about your calls, messages, and data and synchronisation events, select **Menu** > **Log** and the appropriate option.

© 2009 Nokia. All rights reserved.

Note: The actual invoice for calls and services from your service provider may vary, depending on network features, rounding off for billing, taxes, and so forth.

Music

Media player

Your device includes a media player for listening to songs or other MP3 or AAC sound files.

Warning:
Continuous exposure to high volume may damage your hearing. Listen to music at a moderate level, and do not hold the device near your ear when the loudspeaker is in use.

Select **Menu** > **Music** > **My music** > **Go to Media player**.

Operate the media player with the media player keys or with the virtual keys on the display.

Start or pause playing

Press ▶II.

© 2009 Nokia. All rights reserved.

Skip to the beginning of the current song
Press ⏮.

Skip to the previous song
Press ⏮ twice.

Skip to the next song
Press ⏭.

Rewind or fast-forward the current song
Press and hold ⏮ or ⏭.

Adjust the volume
Use the volume keys.

Mute or unmute the media player
Press #.

Leave the media player playing in the background
Press the end key.

Close the media player
Press and hold the end key.

© 2009 Nokia. All rights reserved.

FM radio

Your device supports Nokia XpressRadio, allowing you to listen to radio stations with built-in antenna.

Warning:
Continuous exposure to high volume may damage your hearing. Listen to music at a moderate level, and do not hold the device near your ear when the loudspeaker is in use.

Select **Menu** > **Music** > **Radio**.

Automatically search for available stations

Select **Options** > **Search all stations**. For best results, search when outdoors or near a window.

Automatically switch to a frequency with better reception

Check that RDS is activated. Select **Options** > **Settings** > **RDS**.

Select **Auto-frequency**.

© 2009 Nokia. All rights reserved.

Search for a neighbouring station

Press and hold the scroll key to the left or right.

Save a station

Tune to the desired station, and select **Options** > **Save station**.

Switch between saved stations

Scroll up or down to switch between stations, or press the corresponding number key of the memory location of a desired station.

Adjust the volume

Use the volume keys.

Listen using the headset or the loudspeaker

Select **Options** > **More** > **Play via**.

Leave the radio playing in the background

Press the end key.

Close the radio

Press and hold the end key.

© 2009 Nokia. All rights reserved.

Camera and video

Your device supports an image capture resolution of 2592x1944 pixels.

Camera mode

Open the camera

In the home screen, press and hold the capture key.

Zoom in or out

Scroll up or down.

Capture an image

Press the capture key.

Set the preview mode and time

Select **Options** > **Settings** > **Photo preview time**.

To activate the self-timer, select **Options** and the desired option.

© 2009 Nokia. All rights reserved.

Video mode

Open the video camera

Press and hold the capture key, and scroll right.

Start recording a video clip

Press the capture key.

Switch between camera and video mode

In camera or video mode, scroll left or right.

Photos

View images and play video clips with the Photos application.

Select **Menu** > **Photos**.

Select from the following:

My photos — View images in a thumbnail grid. You can sort images by date, name, or size.

Timeline — View images in the order they were captured.

© 2009 Nokia. All rights reserved.

My albums — Sort images into albums. You can create, rename and remove albums. If you remove an album, the images inside the album are not deleted from the memory.

You may not be able to view, use, or edit photos until they have been processed.

Rotate an image

Select **Options** > **Landscape mode** or **Portrait mode**.

View a slide show

A slide show uses the images of the currently selected folder or album.

1 Select **My photos**, **Timeline**, or **My albums**.
2 Select **Options** > **Slide show**.
3 Select **Start slide show**.

Edit images

You can, for example, rotate, flip, crop, and adjust the brightness, contrast, and colours of images.

1 Select an image in My photos, Timeline, or My albums.
2 Select **Options** > **Edit photo**.

© 2009 Nokia. All rights reserved.

3 Select an editing option, and use the scroll key to modify the settings or values.

Settings

Profiles

Waiting for a call, but can't let your device ring? There are various settings groups called profiles, which you can customise with ringing tones for different events and environments.

Select **Menu** > **Settings** > **Profiles**.

Select the desired profile and from the following:

Activate — Activate the profile.

Personalise — Modify the profile settings.

Timed — Set the profile to be active until a certain time. When the time set for the profile expires, the previous profile that was not timed becomes active.

Tones

You can change the tone settings of the selected active profile.

© 2009 Nokia. All rights reserved.

Select **Menu** > **Settings** > **Tones**. You can find the same settings in the **Profiles** menu.

Display

Select **Menu** > **Settings** > **Display**.

You can view or adjust the wallpaper, font size, or other features related to the device display.

Date and time

Select **Menu** > **Settings** > **Date and time**.

Set the date and time

Select **Date & time settings**.

Set the date and time format

Select **Date & time format**.

Update the time automatically according to the current time zone

Select **Auto-update of time** (network service).

© 2009 Nokia. All rights reserved.

Shortcuts

With personal shortcuts, you can get quick access to frequently used phone functions.

Select **Menu** > **Settings** > **My shortcuts**.

Assign phone functions to the selection keys

Select **Right selection key** or **Left selection key** and a function from the list.

Select shortcut functions for the scroll key

Select **Navigation key**. Scroll to the desired direction, and select **Change** or **Assign** and a function from the list.

Synchronisation and backup

Select **Menu** > **Settings** > **Sync and backup**.

Select from the following:

Sync with Ovi — Synchronise your personal data with Ovi. Before you start synchronising, you need to set up your Nokia account. Select **Connect**, and you are guided through the process of synchronising data. The availability of this option may vary.

© 2009 Nokia. All rights reserved.

Sync with server — Synchronise or copy selected data between your device and a network server (network service).

Phone switch — Synchronise or copy selected data, such as your contacts, calendar entries, notes, or messages, between your device and another device.

Create backup — Back up selected data.

Restore backup — Restore data from a backup. To view the details of a backup file, select **Options** > **Details**.

Connectivity

Your phone has several features that allow you to connect to other devices to transmit and receive data.

Bluetooth wireless technology

Bluetooth technology allows you to connect your device, using radio waves, to a compatible Bluetooth device within 10 metres (32 feet).

This device is compliant with Bluetooth Specification 2.1 + EDR supporting the following profiles: generic access, network access, control, hands-free, headset, object push, file transfer, dial-up networking, SIM access, and serial port. To ensure interoperability between other devices

© 2009 Nokia. All rights reserved.

supporting Bluetooth technology, use Nokia approved accessories for this model. Check with the manufacturers of other devices to determine their compatibility with this device.

Features using Bluetooth technology increase the demand on battery power and reduce the battery life.

When the wireless device is in the remote SIM mode, you can only use a compatible connected accessory, such as a car kit, to make or receive calls.

Your wireless device will not make any calls, except to the emergency numbers programmed into your device, while in this mode.

To make calls, you must first leave the remote SIM mode. If the device has been locked, enter the lock code to unlock it first.

Open a Bluetooth connection

1 Select **Menu** > **Settings** > **Connectivity** > **Bluetooth**.

2 Select **My phone's name**, and enter a name for your device.

© 2009 Nokia. All rights reserved.

3 To activate Bluetooth connectivity, select **Bluetooth** > **On**. indicates that Bluetooth connectivity is active.

4 To connect your device to an audio accessory, select **Conn. to audio access.** and the accessory.

5 To pair your device with any Bluetooth device in range, select **Paired devices** > **Add new device**.

6 Scroll to a found device, and select **Add**.

7 Enter a passcode (up to 16 characters) on your device, and allow the connection on the other Bluetooth device.

Operating the device in hidden mode is a safer way to avoid malicious software. Do not accept Bluetooth connectivity from sources you do not trust. Alternatively, switch off the Bluetooth function. This does not affect other functions of the device.

Connect your PC to the internet

You can use Bluetooth technology to connect your compatible PC to the internet. Your device must be able to connect to the internet (network service), and your PC must support Bluetooth technology. After connecting to the network access point (NAP) service of the device and

© 2009 Nokia. All rights reserved.

pairing with your PC, your device automatically opens a packet data connection to the internet.

Packet data

General packet radio service (GPRS) is a network service that allows mobile phones to send and receive data over an internet protocol (IP) based network.

To define how to use the service, select **Menu** > **Settings** > **Connectivity** > **Packet data** > **Packet data connection** and from the following:

When needed — Establish a packet data connection when needed by an application. The connection is closed when the application is closed.

Always online — Automatically connect to a packet data network when you switch the device on.

You can use your device as a modem by connecting it to a compatible PC using Bluetooth technology. For details, see the Nokia PC Suite documentation.

Call and phone

Select **Menu** > **Settings** > **Call**.

© 2009 Nokia. All rights reserved.

Divert incoming calls

Select **Call divert** (network service). For details, contact your service provider.

Automatically redial ten times after an unsuccessful attempt

Select **Automatic redial** > **On**.

Get a notification of incoming calls while you are in a call

Select **Call waiting** > **Activate** (network service).

Display or hide your number to the person you are calling

Select **Send my caller ID** (network service).

Select **Menu** > **Settings** > **Phone**.

Set the display language

Select **Language settings** > **Phone language**.

Accessories

This menu is only available if the device is or has been connected to a compatible accessory.

© 2009 Nokia. All rights reserved.

Select **Menu** > **Settings** > **Accessories**. Select an accessory and an option, depending on the accessory.

Configuration

You can configure your device with settings that are required for certain services. Your service provider may also send you these settings.

Select **Menu** > **Settings** and **Configuration**.

Select from the following:

Default config. settings — View the service providers saved in the device, and set a default service provider.

Default in all apps. — Activate the default configuration settings for supported applications.

Preferred access point — View the saved access points.

Personal settings — Add new personal accounts for various services, and activate or delete them. To add a new personal account, select **Add** or **Options** > **Add new**. Select the service type, and enter the required information. To activate a personal account, scroll to the account, and select **Options** > **Activate**.

© 2009 Nokia. All rights reserved.

Restore factory settings

To restore the phone back to factory settings, select **Menu** > **Settings** > **Restore factory sett.** and from the following:

Settings only — Reset all preference settings without deleting any personal data.

All — Reset all preference settings and delete all personal data, such as contacts, messages, media files, and activation keys.

Applications

Alarm clock

You can set an alarm to sound at a desired time.

Set the alarm

1 Select **Menu** > **Applications** > **Alarm clock**.
2 Enter the alarm time.
3 To repeat an alarm on selected days of the week, select **Repeat:** > **On** and the days.
4 Select the alarm tone. If you select the radio as the alarm tone, connect the headset to the device.
5 Set the length of the snooze time-out period, and select **Save**.

© 2009 Nokia. All rights reserved.

Stop the alarm

Select **Stop**. If you let the alarm sound for a minute or select **Snooze**, the alarm stops for the length of the snooze time-out period, then resumes.

Gallery

In Gallery, you can manage images, video clips, and music files.

View the Gallery contents

Select **Menu** > **Applications** > **Gallery**.

Upload an image or video clip to a web-based service when viewing the file

Select **Send** > **Upload to web** and the desired upload service.

Extras

Your device may include some games and Java™ applications specially designed for your device.

Select **Menu** > **Applications** > **Extras**.

© 2009 Nokia. All rights reserved.

Open a game or application

Select **Games**, **Collection**, or **Memory card**, and a game or an application.

View the amount of memory available for game and application installations

Select **Options** > **Memory status**.

Download a game or application

Select **Options** > **Downloads** > **Game downloads** or **Application downloads**.

Your device supports J2ME™ Java applications. Ensure that the application is compatible with your device before downloading it.

Important: Only install and use applications and other software from trusted sources, such as applications that are Symbian Signed or have passed the Java Verified™ testing.

The downloaded applications may be saved in Gallery instead of Applications.

© 2009 Nokia. All rights reserved.

Voice recorder

Select **Menu** > **Applications** > **Voice recorder**.

Start recording

Select the record icon.

Start recording during a call

Select **Options** > **More** > **Record**. When recording a call, hold the phone in the normal position near to your ear. The recording is saved in the Recordings folder in Gallery.

Listen to the latest recording

Select **Options** > **Play last recorded**.

Send the last recording in a multimedia message

Select **Options** > **Send last recorded**.

Web or Internet

You can access various internet services with your phone browser. The appearance of the web pages may vary due to screen size. You may not be able to see all the details on the web pages.

© 2009 Nokia. All rights reserved.

Depending on your phone, the web browsing function may be displayed as Web or Internet in the menu, hereafter referred to as Web.

Important: Use only services that you trust and that offer adequate security and protection against harmful software.

For the availability of these services, pricing, and instructions, contact your service provider.

You may receive the configuration settings required for browsing as a configuration message from your service provider.

Connect to a web service

Select **Menu** > **Internet** > **Home**. Or, in the home screen, press and hold **0**.

After you make a connection to the service, you can start browsing its pages. The function of the device keys may vary in different services. Follow the instructions on the display. For more information, contact your service provider.

© 2009 Nokia. All rights reserved.

Visit Ovi

Ovi contains services provided by Nokia. With Ovi, you can create a mail account, share your images and video clips with friends and family, plan trips and view locations on a map, download games, applications, video clips, and tones to your device, and purchase music. The available services may vary by region, and not all languages are supported.

To access Ovi services, go to www.ovi.com, and register your own Nokia account.

For more information on how to use the services, see the support pages of each service.

SIM services

Your SIM card may provide additional services. You can access this menu only if it is supported by your SIM card. The name and contents of the menu depend on the available services.

© 2009 Nokia. All rights reserved.

Nokia original accessories

Warning:
Use only batteries, chargers, and accessories approved by Nokia for use with this particular model. The use of any other types may invalidate any approval or warranty, and may be dangerous. In particular, use of unapproved chargers or batteries may present a risk of fire, explosion, leakage, or other hazard.

For availability of approved accessories, check with your dealer.

An extensive range of accessories is available for your device. For more details, see www.nokia-asia.com/accessories

© 2009 Nokia. All rights reserved.

Practical rules about accessories

- Keep all accessories out of the reach of small children.
- When you disconnect the power cord of any accessory, grasp and pull the plug, not the cord.
- Check regularly that accessories installed in a vehicle are mounted and are operating properly.
- Installation of any complex car accessories must be made by qualified personnel only.

Battery

Type: BL-4C

Talk time:

Up to 13 hours and 30 minutes (GSM)

Standby

Up to up to 619 hours (GSM)

Important: Battery talk and stand-by times are estimates and only possible under optimal network conditions. Actual battery talk and standby times depend on SIM cards, features used, battery age and condition, temperatures to which battery is exposed, network conditions, and many

© 2009 Nokia. All rights reserved.

other factors, and may be significantly shorter than those specified above. Ringing tones, hands free call handling, use in digital mode, and other features will also consume the battery, and the amount of time a device is used for calls will affect its stand-by time. Likewise, the amount of time that the device is turned on and in the standby mode will affect its talk time.

Green tips

Save energy

You do not need to charge your battery so often if you do the following (if available for your device):

- Close applications and data connections, for example, your Bluetooth connection, when not in use.
- Decrease the brightness of the screen.
- Set your device to enter power saver mode after the minimum period of inactivity, if available in your device.

© 2009 Nokia. All rights reserved.

- Deactivate unnecessary sounds, such as key tones.

Recycle

All materials of this device can be recovered as materials and energy. For information on how to recycle your old Nokia products, go to www.nokia.com/werecycle, or using a mobile device, www.nokia.mobi/werecycle.

Recycle packaging and user guides at your local recycling scheme.

For more information on the environmental attributes of your device, go to www.nokia.com/ecodeclaration.

Product and safety information

Battery

Battery and charger information

Your device is powered by a rechargeable battery. The battery intended for use with this device is BL-4C. Nokia may make additional battery models available for this device. This device is intended for use when supplied with power from the following chargers: AC-3. The exact charger model number may vary depending on the type of plug. The plug variant is identified by one of the following: E, EB, X, AR, U, A, C, K, or UB.

The battery can be charged and discharged hundreds of times, but it will eventually wear out. When the talk and standby times are noticeably shorter than normal,

© 2009 Nokia. All rights reserved.

replace the battery. Use only Nokia approved batteries, and recharge your battery only with Nokia approved chargers designated for this device.

If a battery is being used for the first time or if the battery has not been used for a prolonged period, it may be necessary to connect the charger, then disconnect and reconnect it to begin charging the battery. If the battery is completely discharged, it may take several minutes before the charging indicator appears on the display or before any calls can be made.

Safe removal. Always switch the device off and disconnect the charger before removing the battery.

Proper charging. Unplug the charger from the electrical plug and the device when not in use. Do not leave a fully charged battery connected to a charger, since overcharging may shorten its lifetime. If left unused, a fully charged battery will lose its charge over time.

Avoid extreme temperatures. Always try to keep the battery between 15°C and 25°C (59°F and 77°F). Extreme temperatures reduce the capacity and lifetime of the battery. A device with a hot or cold battery may not work temporarily. Battery performance is particularly limited in temperatures well below freezing.

Do not short-circuit. Accidental short-circuiting can occur when a metallic object such as a coin, clip, or pen causes direct connection of the positive (+) and negative (-) terminals of the battery. (These look like metal strips on the battery.) This might happen, for example, when you carry a spare battery in your pocket or purse. Short-circuiting the terminals may damage the battery or the connecting object.

Disposal. Do not dispose of batteries in a fire as they may explode. Dispose of batteries according to local regulations. Please recycle when possible. Do not dispose as household waste.

© 2009 Nokia. All rights reserved.

Leak. Do not dismantle, cut, open, crush, bend, puncture, or shred cells or batteries. In the event of a battery leak, prevent battery liquid contact with skin or eyes. If this happens, flush the affected areas immediately with water, or seek medical help.

Damage. Do not modify, remanufacture, attempt to insert foreign objects into the battery, or immerse or expose it to water or other liquids. Batteries may explode if damaged.

Correct use. Use the battery only for its intended purpose. Improper battery use may result in a fire, explosion, or other hazard. If the device or battery is dropped, especially on a hard surface, and you believe the battery has been damaged, take it to a service centre for inspection before continuing to use it. Never use any charger or battery that is damaged. Keep your battery out of the reach of small children.

Nokia battery authentication guidelines

Always use original Nokia batteries for your safety. To check that you are getting an original Nokia battery, purchase it from a Nokia authorised service centre or dealer, and inspect the hologram label using the following steps:

© 2009 Nokia. All rights reserved.

Authenticate hologram

1 When you look at the hologram on the label, you should see the Nokia connecting hands symbol from one angle and the Nokia Original Enhancements logo when looking from another angle.

2 When you angle the hologram left, right, down and up, you should see 1, 2, 3 and 4 dots on each side respectively.

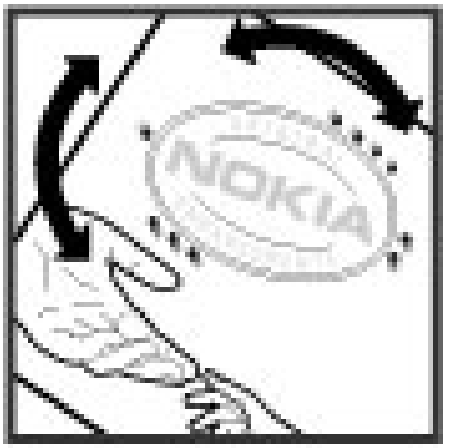

© 2009 Nokia. All rights reserved.

Successful completion of the steps is not a total assurance of the authenticity of the battery. If you cannot confirm authenticity or if you have any reason to believe that your Nokia battery with the hologram on the label is not an authentic Nokia battery, you should refrain from using it, and take it to the nearest Nokia authorised service centre or dealer for assistance.

To find out more about original Nokia batteries, see www.nokia.com/batterycheck

Taking care of your device

Your device is a product of superior design and craftsmanship and should be treated with care. The following suggestions will help you protect your warranty coverage.

- Do not use or store the device in dusty, dirty areas. Its moving parts and electronic components can be damaged.
- Do not store the device in high or cold temperature. High temperatures can shorten the life of electronic devices, damage batteries, and warp or melt certain plastics. When the device warms to its normal temperature from a cold temperature, moisture can form inside the device and damage electronic circuit boards.
- Do not attempt to open the device other than as instructed in this guide.
- Do not drop, knock, or shake the device. Rough handling can break internal circuit boards and fine mechanics.
- Do not use harsh chemicals, cleaning solvents, or strong detergents to clean the device. Only use a soft, clean, dry cloth to clean the surface of the device.
- Do not paint the device. Paint can clog the moving parts and prevent proper operation.
- Use only the supplied or an approved replacement antenna. Unauthorised antennas, modifications, or attachments could damage the device and may violate regulations governing radio devices.
- Use chargers indoors.

© 2009 Nokia. All rights reserved.

- Backup all data you want to keep, such as contacts and calendar notes.
- To reset the device from time to time for optimum performance, power off the device and remove the battery.

These suggestions apply equally to your device, battery, charger, or any accessory.

Recycle

Always return your used electronic products, batteries, and packaging materials to dedicated collection points. This way you help prevent uncontrolled waste disposal and promote the recycling of materials. Check product environmental information and how to recycle your Nokia products at www.nokia.com/werecycle, or nokia.mobi/werecycle.

Additional safety information

Note: The surface of this device does not contain nickel in the platings. The surface of this device contains stainless steel.

Small children

Your device and its accessories are not toys. They may contain small parts. Keep them out of the reach of small children.

Operating environment

This device meets RF exposure guidelines in the normal use position at the ear or at least 1.5 centimetres (5/8 inch) away from the body. Any carry case, belt clip, or holder for body-worn operation should not contain metal and should position the device the above-stated distance from your body.

To send data files or messages requires a quality connection to the network. Data files or messages may be delayed until such a connection is available. Follow the separation distance instructions until the transmission is completed.

© 2009 Nokia. All rights reserved.

Parts of the device are magnetic. Metallic materials may be attracted to the device. Do not place credit cards or other magnetic storage media near the device, because information stored on them may be erased.

Medical devices

Operation of radio transmitting equipment, including wireless phones, may interfere with the function of inadequately protected medical devices. Consult a physician or the manufacturer of the medical device to determine whether they are adequately shielded from external RF energy. Switch off your device when regulations posted instruct you to do so. Hospitals or health care facilities may use equipment sensitive to external RF energy.

Implanted medical devices

Manufacturers of medical devices recommend a minimum separation of 15.3 centimetres (6 inches) between a wireless device and an implanted medical device, such as a pacemaker or implanted cardioverter defibrillator, to avoid potential interference with the medical device. Persons who have such devices should:

- Always keep the wireless device more than 15.3 centimetres (6 inches) from the medical device.
- Not carry the wireless device in a breast pocket.
- Hold the wireless device to the ear opposite the medical device.
- Turn the wireless device off if there is any reason to suspect that interference is taking place.
- Follow the manufacturer directions for the implanted medical device.

If you have any questions about using your wireless device with an implanted medical device, consult your health care provider.

© 2009 Nokia. All rights reserved.

Hearing aids

Some digital wireless devices may interfere with some hearing aids.

Vehicles

RF signals may affect improperly installed or inadequately shielded electronic systems in motor vehicles such as electronic fuel injection systems, electronic antilock braking, electronic speed control systems, and air bag systems. For more information, check with the manufacturer of your vehicle or its equipment.

Only qualified personnel should service the device or install the device in a vehicle. Faulty installation or service may be dangerous and may invalidate any warranty that may apply to the device. Check regularly that all wireless device equipment in your vehicle is mounted and operating properly. Do not store or carry flammable liquids, gases, or explosive materials in the same compartment as the device, its parts, or accessories. Remember that air bags inflate with great force. Do not place your device or accessories in the air bag deployment area.

Switch off your device before boarding an aircraft. The use of wireless teledevices in an aircraft may be dangerous to the operation of the aircraft and may be illegal.

Potentially explosive environments

Switch off your device in any area with a potentially explosive atmosphere. Obey all posted instructions. Sparks in such areas could cause an explosion or fire resulting in bodily injury or death. Switch off the device at refuelling points such as near gas pumps at service stations. Observe restrictions in fuel depots, storage, and distribution areas; chemical plants; or where blasting operations are in progress. Areas with a potentially explosive atmosphere are often, but not always, clearly marked. They include areas where you would be advised to turn off your vehicle engine, below deck on boats, chemical transfer or storage facilities and where the air contains chemicals or particles such as grain, dust, or metal powders. You should check with the manufacturers of vehicles using liquefied petroleum gas (such as propane or butane) to determine if this device can be safely used in their vicinity.

© 2009 Nokia. All rights reserved.

Emergency calls

Important: This device operates using radio signals, wireless networks, landline networks, and user-programmed functions. If your device supports voice calls over the internet (internet calls), activate both the internet calls and the cellular phone. The device may attempt to make emergency calls over both the cellular networks and through your internet call provider if both are activated. Connections in all conditions cannot be guaranteed. You should never rely solely on any wireless device for essential communications like medical emergencies.

To make an emergency call:

1. If the device is not on, switch it on. Check for adequate signal strength. Depending on your device, you may also need to complete the following:
   - Insert a SIM card if your device uses one.
   - Remove certain call restrictions you have activated in your device.
   - Change your profile from Offline or Flight profile to an active profile.
2. Press the end key as many times as needed to clear the display and ready the device for calls.
3. Enter the official emergency number for your present location. Emergency numbers vary by location.
4. Press the call key.

When making an emergency call, give all the necessary information as accurately as possible. Your wireless device may be the only means of communication at the scene of an accident. Do not end the call until given permission to do so.

Certification information (SAR)

This mobile device meets guidelines for exposure to radio waves.

© 2009 Nokia. All rights reserved.

Your mobile device is a radio transmitter and receiver. It is designed not to exceed the limits for exposure to radio waves recommended by international guidelines. These guidelines were developed by the independent scientific organisation ICNIRP and include safety margins designed to assure the protection of all persons, regardless of age and health.

The exposure guidelines for mobile devices employ a unit of measurement known as the Specific Absorption Rate or SAR. The SAR limit stated in the ICNIRP guidelines is 2.0 watts/kilogram (W/kg) averaged over 10 grams of tissue. Tests for SAR are conducted using standard operating positions with the device transmitting at its highest certified power level in all tested frequency bands. The actual SAR level of an operating device can be below the maximum value because the device is designed to use only the power required to reach the network. That amount changes depending on a number of factors such as how close you are to a network base station.

The highest SAR value under the ICNIRP guidelines for use of the device at the ear is 0.82 W/kg.

Use of device accessories may result in different SAR values. SAR values may vary depending on national reporting and testing requirements and the network band. Additional SAR information may be provided under product information at www.nokia.com.

MANUFACTURER'S LIMITED WARRANTY

This Limited Warranty is in addition to, and does not affect your legal (statutory) rights under your applicable national laws relating to the sale of consumer products.

Nokia Corporation ("Nokia") provides this Limited Warranty to person who has purchased the Nokia product(s) included in the sales package ("Product").

Nokia warrants to you that during the warranty period Nokia or a Nokia authorised service company will in a commercially reasonable time remedy defects in materials,

© 2009 Nokia. All rights reserved.

design and workmanship free of charge by repairing or, should Nokia in its absolute discretion deem it necessary, replacing the Product in accordance with this Limited Warranty (unless otherwise required by law). This Limited Warranty is only valid and enforceable in the country where you have purchased the Product provided that it is intended for sale in that country.

Warranty period

The warranty period starts at the time of Product's original purchase by the first end-user. The Product may consist of several different parts and different parts may be covered by a different warranty period (hereinafter “Warranty Period”). The different Warranty Periods are:

a) twelve (12) months for the mobile device and accessories (whether included in the mobile device sales package or sold separately) other than the consumable parts and accessories listed in (b) and (c) below;

b) six (6) months for the following consumable parts and accessories: batteries, chargers, desk stands, headsets, cables and covers; and

c) ninety (90) days for the media on which any software is provided, for example, CD-ROM or memory card

As far as your national laws permit, the Warranty Period will not be extended or renewed or otherwise affected due to subsequent resale, repair or replacement of the Product. However, repaired part(s) will be warranted for the remainder of the original Warranty Period or for sixty (60) days from the date of repair, whichever is longer.

How to get warranty service

If you wish to make a claim under the Limited Warranty, you may call the Nokia call centre (where this is available and please note national rates apply to calls) and/or where necessary, return your Product or the affected part (if it is not the entire

© 2009 Nokia. All rights reserved.

Product) to a Nokia care centre or Nokia designated service location. Information about Nokia care centres, Nokia designated service locations and Nokia call centres can be found at local Nokia web pages where available.

You must return your Product or the affected part (if it is not the entire Product) to a Nokia care centre or Nokia designated service location before the expiry of the Warranty Period.

When making a Limited Warranty claim you have to present: a) the Product (or affected part thereto), b) the legible and unmodified original proof of purchase, which clearly indicates the name and address of the seller, the date and place of purchase, the product type and the IMEI or other serial number.

This Limited Warranty extends only to the original first end-user of the Product and is not assignable or transferable to any subsequent purchaser/end-user.

What is not covered?

1. This Limited Warranty does not cover user manuals or any third party software, settings, content, data or links, whether included/downloaded in the Product, whether included during installment, assembly, shipping or at any other time in the delivery chain or otherwise and in any way acquired by you. To the extent permitted by applicable law(s), Nokia does not warrant that any Nokia software will meet your requirements, will work in combination with any hardware or software applications provided by a third party, that the operation of the software will be uninterrupted or error free or that any defects in the software are correctable or will be corrected.

2. This Limited Warranty does not cover a) normal wear and tear (including, without limitation, wear and tear of camera lenses, batteries or displays), b) transport costs, c) defects caused by rough handling (including, without limitation, defects caused by sharp items, by bending, compressing or dropping, etc.), d) defects or damage caused by misuse of the Product, including use that is contrary to the instructions provided

© 2009 Nokia. All rights reserved.

by Nokia (e.g. as set out in the Product's user guide) and/or e) other acts beyond the reasonable control of Nokia.

3. This Limited Warranty does not cover defects or alleged defects caused by the fact that the Product was used with, or connected to, a product, accessories, software and/or service not manufactured, supplied or authorised by Nokia or was used otherwise than for its intended use. Defects can be caused by viruses from your or from a third party's unauthorised access to services, other accounts, computer systems or networks. This unauthorised access can take place through hacking, password-mining or through a variety of other means.

4. This Limited Warranty does not cover defects caused by the fact that the battery has been short-circuited or by the fact that the seals of the battery enclosure or the cells are broken or show evidence of tampering or by the fact that the battery has been used in equipment other than those for which it has been specified.

5. This Limited Warranty does not apply if the Product has been opened, modified or repaired by anyone other than an authorised service centre, if it is repaired using unauthorised spare parts or if the Product’s serial number, the mobile accessory date code or the IMEI number has been removed, erased, defaced, altered or are illegible in any way and this shall be determined in the sole discretion of Nokia.

6. This Limited Warranty does not apply if the Product has been exposed to moisture, to dampness or to extreme thermal or environmental conditions or to rapid changes in such conditions, to corrosion, to oxidation, to spillage of food or liquid or to influence from chemical products.

Other important notices

A third party, independent operator provides the SIM card and cellular and/or other network or system on which the Product operates. Therefore, Nokia will not accept responsibility under this warranty for the operation, availability, coverage, services or range of the cellular or other network or system. Before the Product can be repaired

© 2009 Nokia. All rights reserved.

or replaced, the operator may need to unlock any SIM-lock or other lock that may have been added to lock the product to a specific network or operator. Accordingly, Nokia does not accept responsibility for any delays in warranty repairs or for the inability of Nokia to complete warranty repairs that are caused by the operator's delay or failure to unlock any SIM-lock or other lock.

Please remember to make backup copies or keep written records of all important content and data stored in your Product, because content and data may be lost during repair or replacement of the Product. Nokia, in a manner consistent with the provisions of the section entitled “Limitation of Nokia's Liability” below, to the extent permitted by applicable law(s), shall not under any circumstances be liable, either expressly or implied, for any damages or losses of any kind whatsoever resulting from loss of, damage to, or corruption of, content or data during repair or replacement of the Product.

All parts of the Product or other equipment that Nokia has replaced shall become the property of Nokia. If the returned Product is found not to be covered by the terms and conditions of the Limited Warranty, Nokia and its authorised service companies reserve the right to charge a handling fee. When repairing or replacing the Product, Nokia may use products or parts that are new, equivalent to new or reconditioned.

Your Product may contain country specific elements, including software. If the Product has been re-exported from its original destination country to another country, the Product may contain country specific elements that are not considered to be a defect under this Limited Warranty.

Limitation of Nokia's liability

This Limited Warranty is your sole and exclusive remedy against Nokia and Nokia's sole and exclusive liability in respect of defects in your Product. However, this Limited Warranty shall neither exclude nor limit i) any of your legal (statutory) rights under the applicable national laws or ii) any of your rights against the seller of the Product.

© 2009 Nokia. All rights reserved.

This Limited Warranty replaces all other Nokia warranties and liabilities, whether oral, written, (non-mandatory) statutory, contractual, in tort or otherwise, including, without limitation, and where permitted by applicable law, any implied conditions, warranties or other terms as to satisfactory quality or fitness for purpose. To the extent permitted by applicable law(s) Nokia does not assume any liability for loss of or damage to or corruption of data, for any loss of profit, loss of use of Products or functionality, loss of business, loss of contracts, loss of revenues or loss of anticipated savings, increased costs or expenses or for any indirect loss or damage, consequential loss or damage or special loss or damage. To the extent permitted by applicable law, Nokia's liability shall be limited to the purchase value of the Product. The above limitations shall not apply to death or personal injury resulting from Nokia's proven negligence.

Statutory obligations

This Limited Warranty must be read subject to any statutory provisions that imply warranties or conditions into this Limited Warranty that cannot be excluded, restricted or modified or cannot be excluded, restricted or modified except to a limited extent. If such statutory provisions apply, to the extent to which Nokia is able to do so, its liability under those provisions will be limited, at its option to, in the case of goods: the replacement of the goods or the supply of equivalent goods, the repair of the goods, the payment of the cost of replacing the goods or of acquiring equivalent goods, or the payment of the cost of having the goods repaired; and in the case of services: the supplying of the services again or the payment of the cost of having the services supplied again.

Note: Your Product is a sophisticated electronic device. Nokia strongly encourages you to familiarise yourself with the user guide and instructions provided with and for the Product. Please also note that the Product might contain high precision displays, camera lenses and other such parts, which could be scratched or otherwise damaged if not handled very carefully.

© 2009 Nokia. All rights reserved.

All warranty information, product features and specifications are subject to change without notice.

Nokia Corporation

Keilalahdentie 2-4

FIN-02150 Espoo

Finland

© 2009 Nokia. All rights reserved.

DECLARATION OF CONFORMITY

CE 0434

Hereby, NOKIA CORPORATION declares that this RM-618 product is in compliance with the essential requirements and other relevant provisions of Directive 1999/5/EC. A copy of the Declaration of Conformity can be found at http://www.nokia.com/phones/declaration_of_conformity/.

© 2009 Nokia. All rights reserved.

Nokia, Nokia Connecting People, and Navi are trademarks or registered trademarks of Nokia Corporation. Nokia tune is a sound mark of Nokia Corporation. Other product and company names mentioned herein may be trademarks or tradenames of their respective owners.

Reproduction, transfer, distribution, or storage of part or all of the contents in this document in any form without the prior written permission of Nokia is prohibited. Nokia operates a policy of continuous development. Nokia reserves the right to make changes and improvements to any of the products described in this document without prior notice.

Includes RSA BSAFE cryptographic or security protocol software from RSA Security.

Java POWERED

Java is a trademark of Sun Microsystems, Inc.

This product is licensed under the MPEG-4 Visual Patent Portfolio License (i) for personal and noncommercial use in connection with information which has been encoded in compliance with the MPEG-4 Visual Standard by a consumer engaged in a personal and noncommercial activity and (ii) for use in connection with MPEG-4 video provided by a licensed video provider. No license is granted or shall be implied for any other use. Additional

information, including that related to promotional, internal, and commercial uses, may be obtained from MPEG LA, LLC. See http://www.mpegla.com.

TO THE MAXIMUM EXTENT PERMITTED BY APPLICABLE LAW, UNDER NO CIRCUMSTANCES SHALL NOKIA OR ANY OF ITS LICENSORS BE RESPONSIBLE FOR ANY LOSS OF DATA OR INCOME OR ANY SPECIAL, INCIDENTAL, CONSEQUENTIAL OR INDIRECT DAMAGES HOWSOEVER CAUSED.

THE CONTENTS OF THIS DOCUMENT ARE PROVIDED "AS IS". EXCEPT AS REQUIRED BY APPLICABLE LAW, NO WARRANTIES OF ANY KIND, EITHER EXPRESS OR IMPLIED, INCLUDING, BUT NOT LIMITED TO, THE IMPLIED WARRANTIES OF MERCHANTABILITY AND FITNESS FOR A PARTICULAR PURPOSE, ARE MADE IN RELATION TO THE ACCURACY, RELIABILITY OR CONTENTS OF THIS DOCUMENT. NOKIA RESERVES THE RIGHT TO REVISE THIS DOCUMENT OR WITHDRAW IT AT ANY TIME WITHOUT PRIOR NOTICE.
The availability of particular products and applications and services for these products may vary by region. Please check with your Nokia dealer for details and availability of language options. This device may contain commodities, technology or software subject to export laws and regulations from the US and other countries. Diversion contrary to law is prohibited.
The third-party applications provided with your device may have been created and may be owned by persons or entities not affiliated with or related to Nokia. Nokia does not own the copyrights or intellectual property rights to the third-party applications. As such, Nokia does not take any responsibility for end-user support, functionality of the applications, or the information in the applications or these materials. Nokia does not provide any warranty for the third-party applications. BY USING THE APPLICATIONS YOU ACKNOWLEDGE THAT THE APPLICATIONS ARE PROVIDED AS IS WITHOUT WARRANTY OF ANY KIND, EXPRESS OR IMPLIED, TO THE MAXIMUM EXTENT PERMITTED BY APPLICABLE LAW. YOU FURTHER ACKNOWLEDGE THAT NEITHER NOKIA NOR ITS AFFILIATES MAKE ANY REPRESENTATIONS OR WARRANTIES, EXPRESS OR IMPLIED, INCLUDING BUT NOT LIMITED TO WARRANTIES OF TITLE, MERCHANTABILITY OR FITNESS FOR A PARTICULAR PURPOSE, OR THAT THE APPLICATIONS WILL NOT INFRINGE ANY

THIRD-PARTY PATENTS, COPYRIGHTS,
TRADEMARKS, OR OTHER RIGHTS.

Issue 1.1 EN

Index

A

access codes 9
accessories 56
accounts 35
alarm clock 58
attachments 36
audio messages 38

B

backing up data 51
battery 16
— charging 20
battery charge level indicator 21
browser 61

C

calls 27
camera 46
configuration 57

D

date and time 50
display 50

E

e-mail 35
extras 59

F

factory settings, restoring 58
flash messages 37
flashlight 24

G

Gallery 59
games 59

H

headset 26
home screen 22

© 2009 Nokia. All rights reserved.

I

IM (instant messaging) 37
image mode 46
images 47
internet 61

K

keyguard 23
keypad lock 23
keys and parts 14

L

log 41

M

mail 35, 36
mail setup 35
media player 42
memory card 18
menus 32
message centre number 33
message settings 39
messages 34
microSD card 18

N

Nokia original accessories 64
Nokia support information 13

O

Ovi 63

P

passwords 9
phone settings 55
PIN code 9
powering device on/off 19
predictive text input 30
profiles 49

R

radio 44
restoring settings 58

© 2009 Nokia. All rights reserved.

S

security code 9
settings 49
— display 50
shortcuts 51
signal strength indicator 21
SIM card 16
software updates 10, 11, 12
speed dialling 28
status indicators 21
strap 27
support 13
switching device on/off 19
synchronisation 51

T

text input 29, 30
text messages 33
tones 49
turning device on/off 19

U

updates 12
— applications 10
— device software 10, 11
USB cable connection 25

V

video clips 47
video mode 46
voice messages 39
voice recorder 61

W

web 61
write text 29

© 2009 Nokia. All rights reserved.